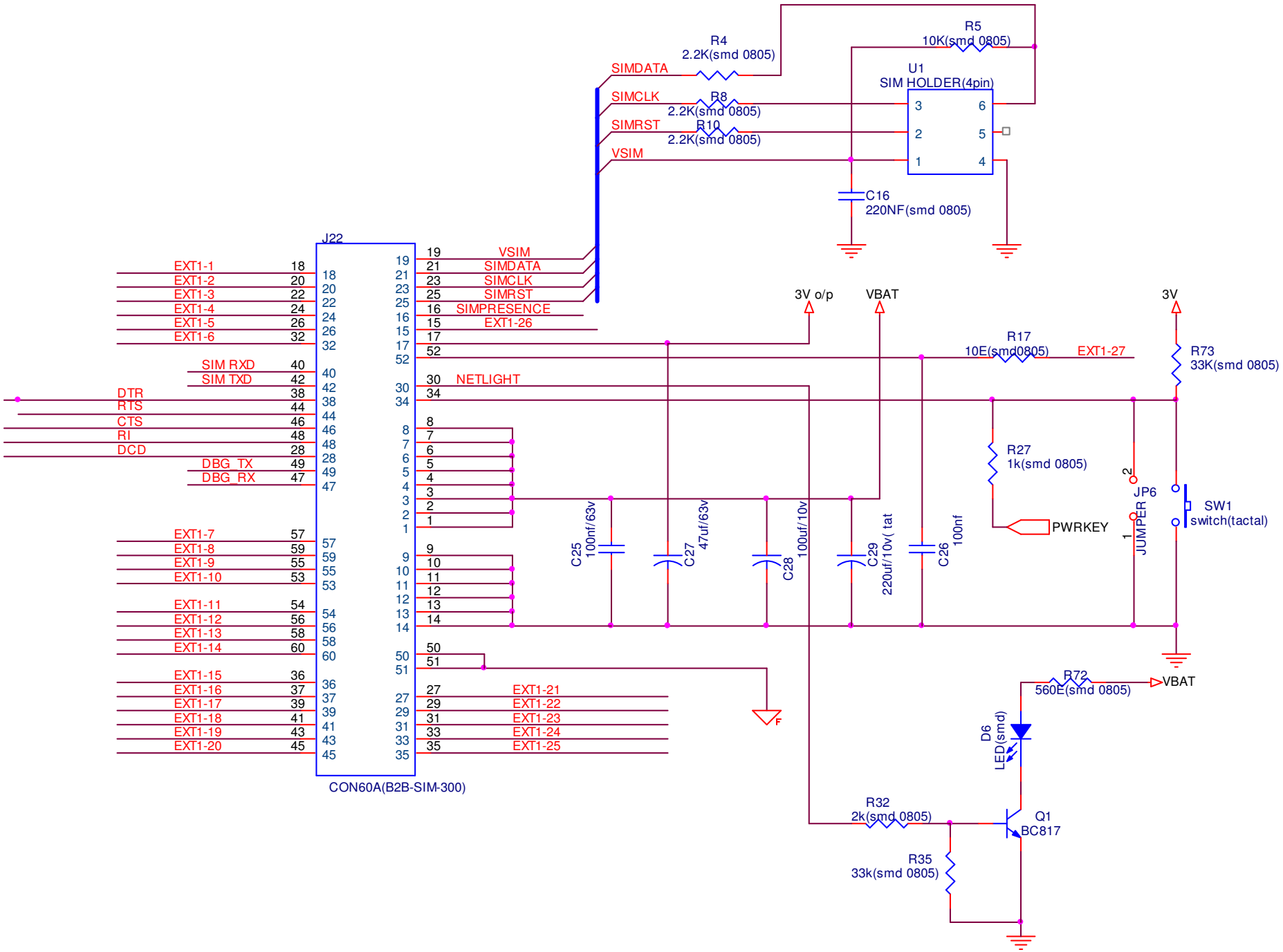
R4
2.2K(smd 0805)
R5
10K(smd 0805)
U1
SIM HOLDER(4pin)
SIMDATA
SIMCLK
SIMRST
VSIM
R8
2.2K(smd 0805)
R10
2.2K(smd 0805)
C16
220NF(smd 0805)
J22
CON60A(B2B-SIM-300)
EXT1-1
EXT1-2
EXT1-3
EXT1-4
EXT1-5
EXT1-6
SIM RXD
SIM TXD
DTR
RTS
CTS
RI
DCD
DBG_TX
DBG_RX
EXT1-7
EXT1-8
EXT1-9
EXT1-10
EXT1-11
EXT1-12
EXT1-13
EXT1-14
EXT1-15
EXT1-16
EXT1-17
EXT1-18
EXT1-19
EXT1-20
SIMPRESENCE
EXT1-26
NETLIGHT
EXT1-21
EXT1-22
EXT1-23
EXT1-24
EXT1-25
3V o/p
VBAT
3V
R17
10E(smd0805)
EXT1-27
R73
33K(smd 0805)
R27
1k(smd 0805)
PWRKEY
JP6
JUMPER
SW1
switch(tactal)
C25
100nf/63v
C27
47uf/63v
C28
100uf/10v
C29
220uf/10v(tat
C26
100nf
R72
560E(smd 0805)
D6
LED(smd)
R32
2k(smd 0805)
Q1
BC817
R35
33k(smd 0805)