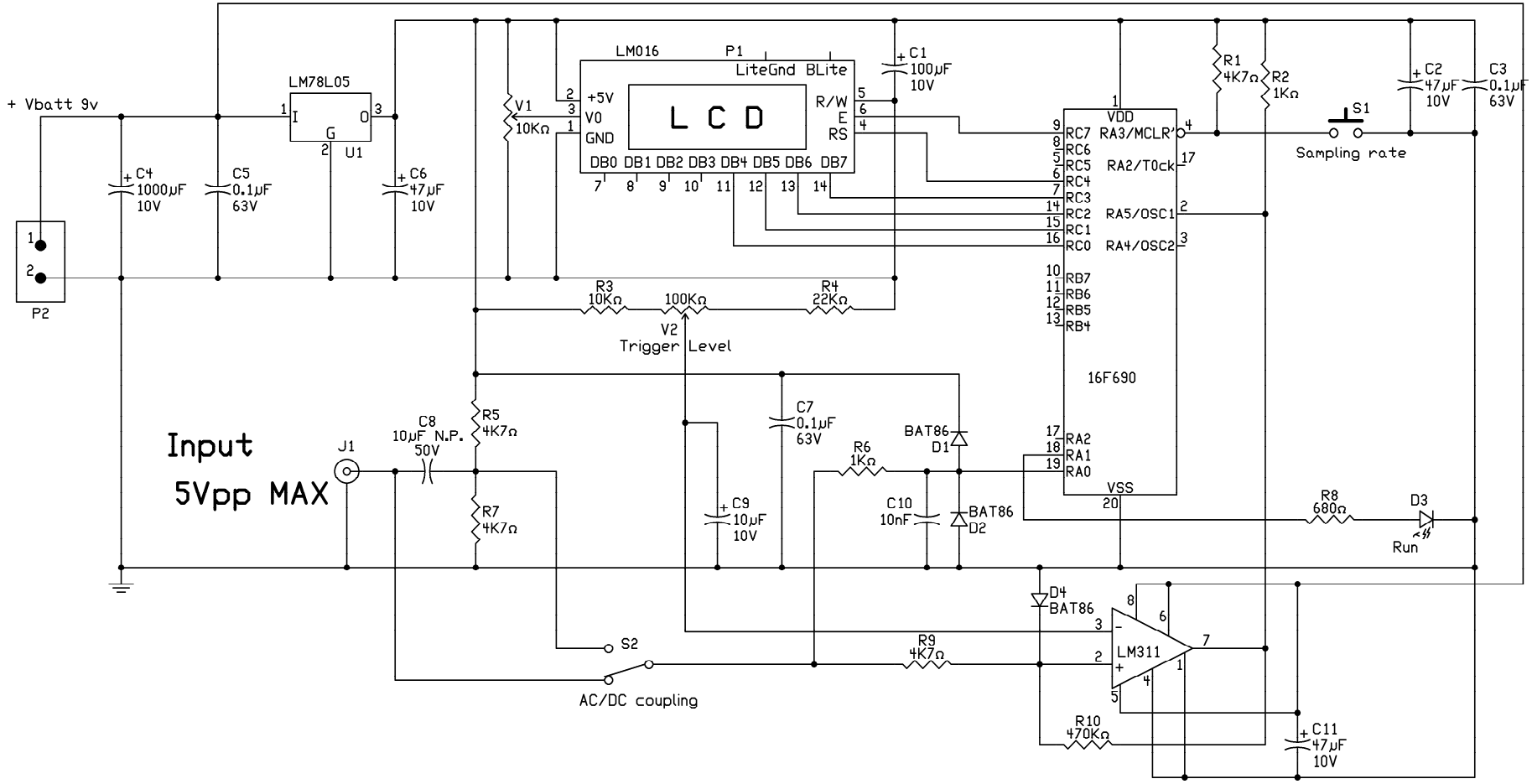

Co:	Who? Me		
Title:	Poor Man's Oscilloscope		
Board:	?	Revision:	A
Author:	Gianni	Size:	A
Date:	21/12/2007	Sheet 1 of 1	